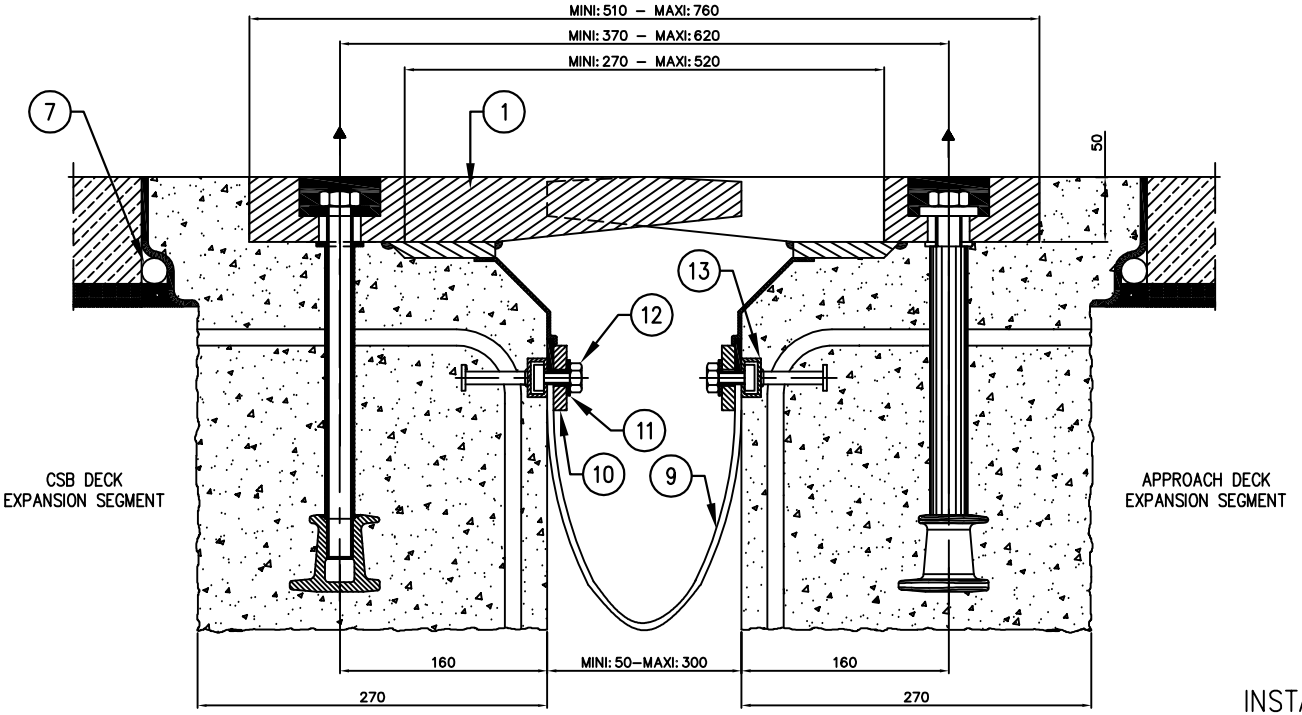

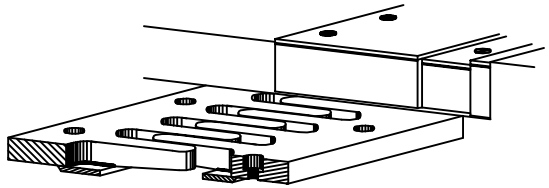

2x4 CONTROLLED
TENSION ANCHORS PER ELEMENT

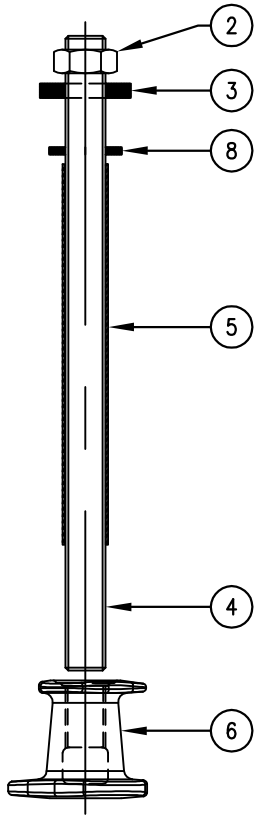

INSTALLATION HANDBOOK
EXPANSION JOINT
N° J–WP000–PR–A–001 REV: B

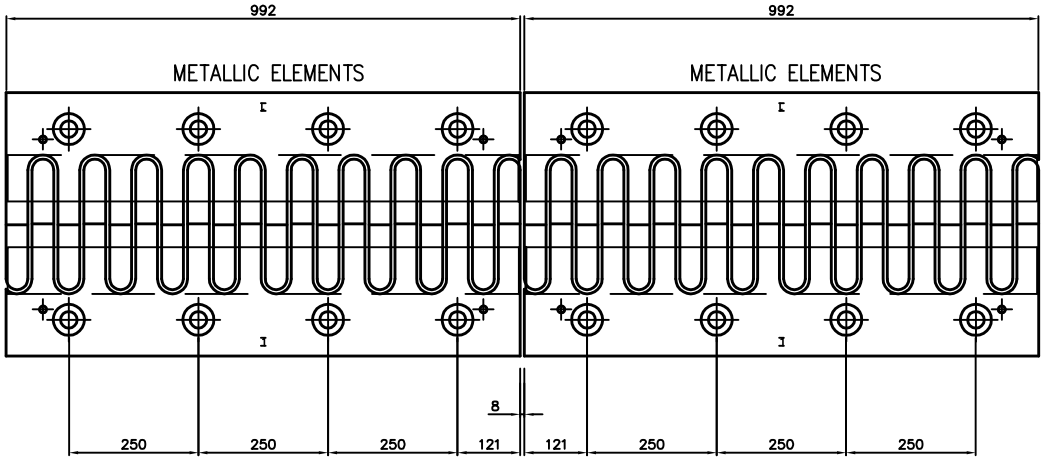

REP	DESIGNATION	MATERIAL	PROTECTION
13	Rail Halfen	S235 JR	Galvanisation
12	Special Bolt	Grade 4.6	Zingage
11	Washer	Grade C	Zingage
10	Holded Aluminium Cover	Aluminium	N/A
9	Membrane	Chloroprene Rubber	N/A
8	Washer ø23–ø40–4	C40	Zingage
7	Drain ø20	Stainless steel	N/A
6	Cast iron socket M22	EN GJS 400–15	N/A
5	Sheath ø25 lg.210mm	PVC	N/A
4	Prestressing rod ø22 lg.350mm	Grade 10.9	Zingage
3	Washer ø50 e:8mm	C40	Zingage
2	Bolts M22	Grade 10	Zingage
1	Steel element WP250	S355 J0	Metalization 150um

INDICE REV.	DATE	DESSINE DRAWN	VERIFIE CHECKED	APPROUVE APPROVED	MODIFICATIONS
B	09/07/14	S.CU	R.MN	P.SN	Ajout détail du collecteur / Add detail of collector
A	27/11/12	M.NU	R.MN	P.SN	PREMIERE DIFFUSION / FIRST ISSUE

MATIERE / MATERIAL : ....
TRAITEMENT / TREATMENT : ....
MASSE / MASS(kg) : .

AFFAIRE / PROJECT : ...
NUMERO / NUMBER : .
DOSSIER / FILE : EXPANSION JOINT TYPE
NUMERO / NUMBER : .
DESIGNATION / DESIGNATION : WP 250 TYPICAL CROSS VIEW

FREYSSINET INTERNATIONAL & COMPAGNIE
1 Bis RUE DU PETIT CLAMART TEL. : (33.1) 46 01 84 84
78140 VELIZY CEDEX FAX : (33.1) 46 01 85 85
(FRANCE)

REPRODUCTION ET MODIFICATION INTERDITES
COPYRIGHT & MODIFICATION RESERVED

FORMAT/SIZE : A1
ECHELLE/SCALE : 1/1
J18936
B